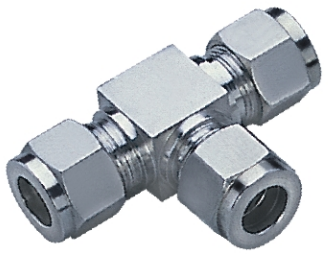

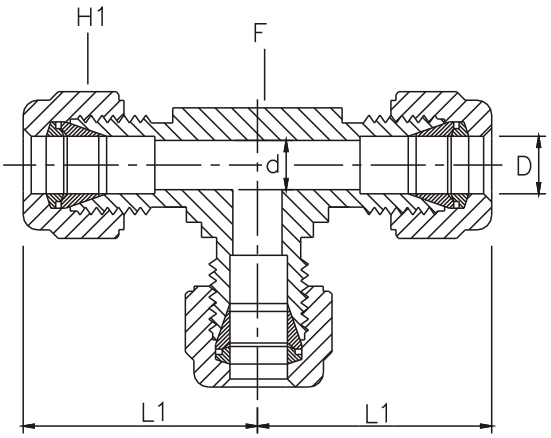

UNION TEE - METRIC TUBING

TUBE O.D. D	WINSEAL NUMBER	L1	H	F	d
6	-6UT - 3	27.1	14	12.7	4.8
8	-8UT - 3	30.0	16	15.9	6.4
10	-10UT - 3	31.6	19	17.5	7.9
12	-12UT - 3	36.1	22	20.6	9.5
15	-15UT - 3	38.3	25	25.4	11.9
16	-16UT - 3	38.8	25	25.4	12.7
18	-18UT - 3	39.8	30	27.0	15.1
20	-20UT - 3	44.6	32	34.9	15.9
22	-22UT - 3	44.6	32	34.9	18.3
25	-25UT - 3	49.1	40	34.9	21.8

UNION TEE - FRACTIONAL TUBING

TUBE O.D. D	WINSEAL NUMBER	L1	H	F	d
1/16	-1IUT - 3	.70	5/16	3/8	.05
1/8	-2IUT - 3	.88	7/16	3/8	.09
3/16	-3IUT - 3	.96	1/2	7/16	.12
1/4	-4IUT - 3	1.06	9/16	1/2	.19
5/16	-5IUT - 3	1.17	5/8	5/8	.25
3/8	-6IUT - 3	1.20	11/16	5/8	.28
1/2	-8IUT - 3	1.42	7/8	13/16	.41
5/8	-10IUT - 3	1.53	1	1	.50
3/4	-12IUT - 3	1.57	1-1/8	1-1/16	.62
7/8	-14IUT - 3	1.76	1-1/4	1-3/8	.72
1	-16IUT - 3	1.93	1-1/2	1-3/8	.88

All dimensions are for reference purpose only & subject to change.